DRAWING NOTES:

1. BEDDING FOR MV CABLE SHALL HAVE A THERMAL RESISTIVITY OF AT LEAST 1.2 K.M/W. IF INSITU SOIL CONDITIONS ARE FOUND UNSUITABLE, IMPORTED SOIL IS TO BE PROVIDED.
2. TRENCH TO BE BACKFILLED IN 150MM LAYERS AND COMPACTED TO 90% MOD AASHTO DENSITY.
3. ALL CONCRETE CABLE ROUTE MARKERS IDENTIFICATION PLATES CAN BE ENGRAVED TO CUSTOMERS SPECIFICATIONS.
4. CONCRETE CABLE ROUTE MARKER TO BE 23KG, WITH 100 X 100MM STAINLESS STEEL PLATE.
5. MV CABLES IN PROXIMITY OR IN COMMON TRENCH WITH LV CABLES TO HAVE MINIMUM 150 MM HORIZONTAL DISTANCE BETWEEN CABLES (LV-MV).

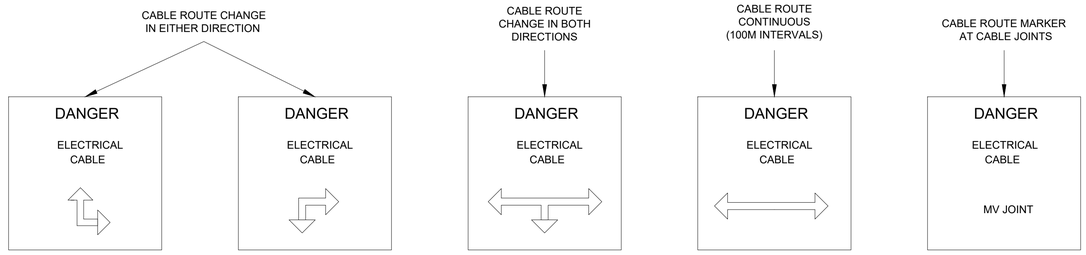

DETAIL OF CABLE ROUTE MARKER
STAINLESS STEEL PLATE
(1:2)

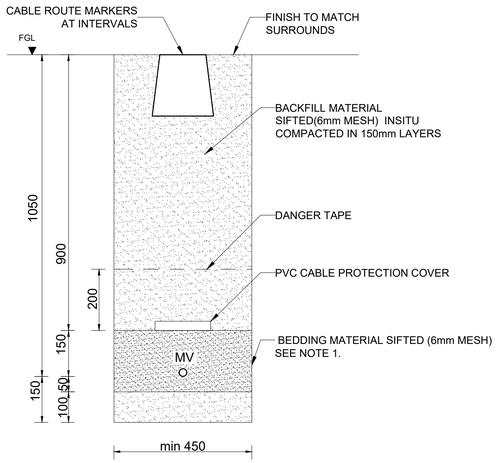

TYPICAL TRENCH DETAIL
FOR SINGLE MV CABLE
(1:10)

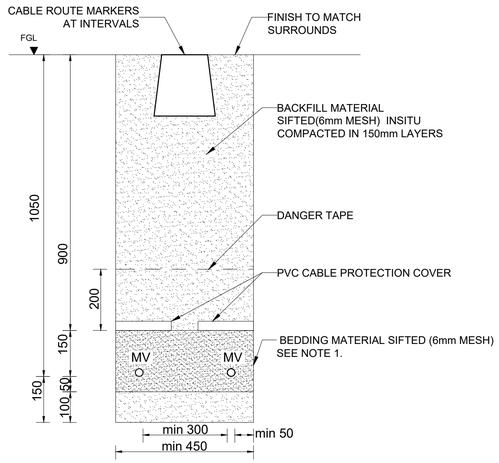

TYPICAL TRENCH DETAIL
FOR MULTIPLE MV CABLES
(1:10)

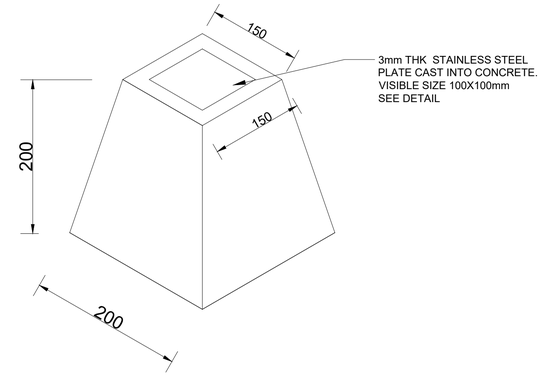

CABLE ROUTE MARKER
(NTS)

No.	DATE	REVISION	APPROVED
V1	10-07-2020	ORIGINAL VERSION	D.N.

SANRAL TYPICAL DRAWINGS

COPYRIGHT: THIS DRAWING IS PROTECTED IN TERMS OF THE COPYRIGHT ACT No. 98 OF 1978 AND MAY NOT BE REPRODUCED WITHOUT THE PERMISSION IN WRITING FROM SANRAL.
CONDITIONS FOR USE: CONSULTANTS APPOINTED BY SANRAL SHALL INCORPORATE THE TYPICAL DETAILS HEREON INTO THEIR SPECIFIC DESIGN FOR WHICH THEY WILL ASSUME FULL PROFESSIONAL RESPONSIBILITY. THIS TYPICAL DRWING MAY NOT BE USED FOR TENDER PURPOSES.

SANRAL
SOUTH AFRICAN NATIONAL ROADS AGENCY SOC LTD
BUILDING SOUTH AFRICA THROUGH BETTER ROADS

HEAD OFFICE
48 Tambotie Avenue
Val de Grace
Pretoria
0184

PO Box 415
Pretoria 0001
South Africa
Tel: (012) 844 8000

EASTERN REGION
58 van Eck Place
Pietermaritzburg
3201

PO Box 100410
Scottsville
3209
Tel: (033) 392 8100

APPROVED

Date: _____

TYPICAL DRAWINGS - ELECTRICAL

MV CABLE TRENCH STANDARD DETAILS

SANRAL DOC No. (PDF): -
SANRAL DOC No. (DWG): -
SANRAL DRAWING No.: TD-E-P-3001-1-V1

TD-E-P-3001-1-V1